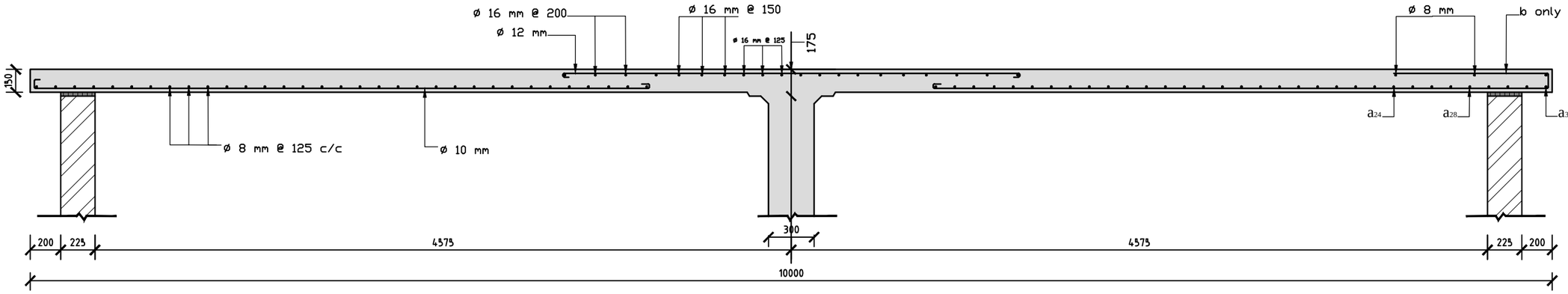

SECTION A–A

SCALE 1:25

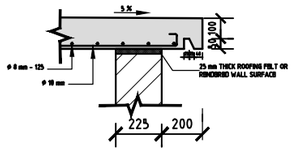

END ROOF DETAIL

SCALE 1:25

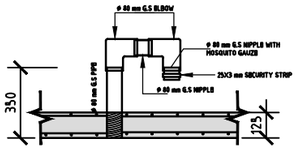

AIR VENT DETAIL

SCALE 1:25

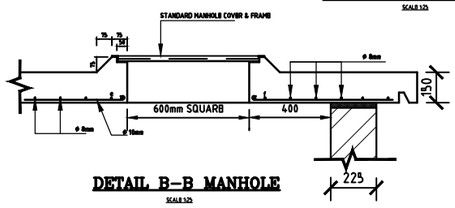

DETAIL B–B MANHOLE

SCALE 1:25

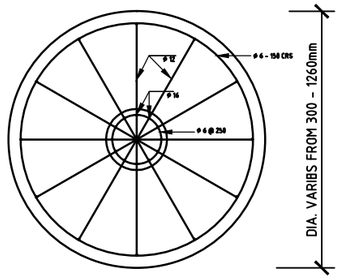

SECTION C–C

SCALE 1:25

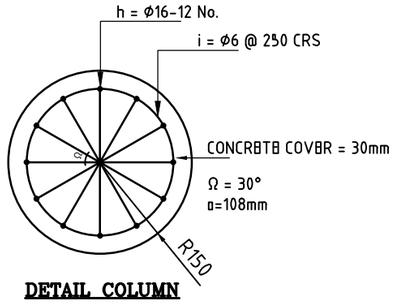

DETAIL COLUMN

SCALE 1:10

NOTES

1. Read this drawing in conjunction with relevant Plans and section drawings. Any discrepancy to be reported to the Engineer.
2. All dimensions are in Millimeters unless specified otherwise.
3. All levels are indicated in mm unless specified otherwise.
4. All structural concrete to be Class 25 (1:1.5:3) unless stated otherwise.
5. Only figured dimensions to be read, no scaling is allowed on this drawing.
6. Nominal aggregate size to be 20mm.

REV	REVISIONS		SIGN	DATE	APPROVED
D		BY			
		CHECKED			
C		BY			
		CHECKED			
B		BY			
		CHECKED			
A		BY			
		CHECKED			

PROJECT

CONSTRUCTION OF MERTI - KORBESA WATER SUPPLY

Client:

Northern Water Services Board (NWSB)
P.o Box 495-70100
Garissa - Kenya

Funding Agency:

GOVERNMENT OF KENYA
Ministry of Water and Irrigation
P.o Box
Nairobi - Kenya

Project:

STANDARD DRAWINGS

225M3 MASONRY STORAGE TANK

Consultant

Northern Water Services Board (NWSB)
P.o Box 495-70100
Garissa - Kenya

Drawing Title:

225M3 MASONRY STORAGE ROOF DETAILS

Surveyed by G. N.	Drawn by J. M.
Checked by G.N.	Approved by: Eng. Nderi
Scales 1:2000	Date: June 2020
Job No.	Sheet 4 of 6
DRAWING No. NWSB/EAWS/WJ/004	